1853023
Glamour Side Table

Parts and Hardware List

A.	Top Assembly	1 pc
B.	Legs	3 pcs
C.	Base Assembly	1 pc
D.	Allen Head Bolts	9 pcs
E.	Lock Washers	9 pcs
F.	Flat Washers	9 pcs
G.	Allen Head Wrench	1 pc
H.	Tassel	1 pc

∗ Please make sure that you have all the parts and hardware indicated above before you begin assembly of this item.
∗ This item should be assembled on a soft surface to prevent scratching of the finish during assembly.
∗ This item may require periodic tightening.

Hardware Illustrations

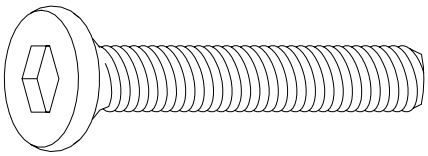

D. Allen Head Bolt

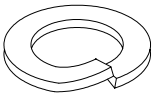

E. Lock Washer

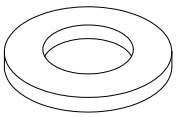

F. Flat Washer

1853023
Glamour Side Table

Attach Legs to Top Assembly

Parts required

A.	Top Assembly	1 pc	E.	Lock Washers	6 pcs
B.	Legs	3 pcs	F.	Flat Washers	6 pcs
D.	Allen Head Bolts	6 pcs	G.	Allen Head Wrench	1 pc

1. **Attach Legs (B)** Turn the Top Assembly (A) upside down. Pull out the drawer. Align the pre-drilled holes on each Leg (B) with the pre-threaded holes in the Top Assembly. Secure with Allen Head Bolts (D), Lock Washers (E) and Flat Washers (F) using the Allen Head Wrench (G). Do not fully tighten at this point.

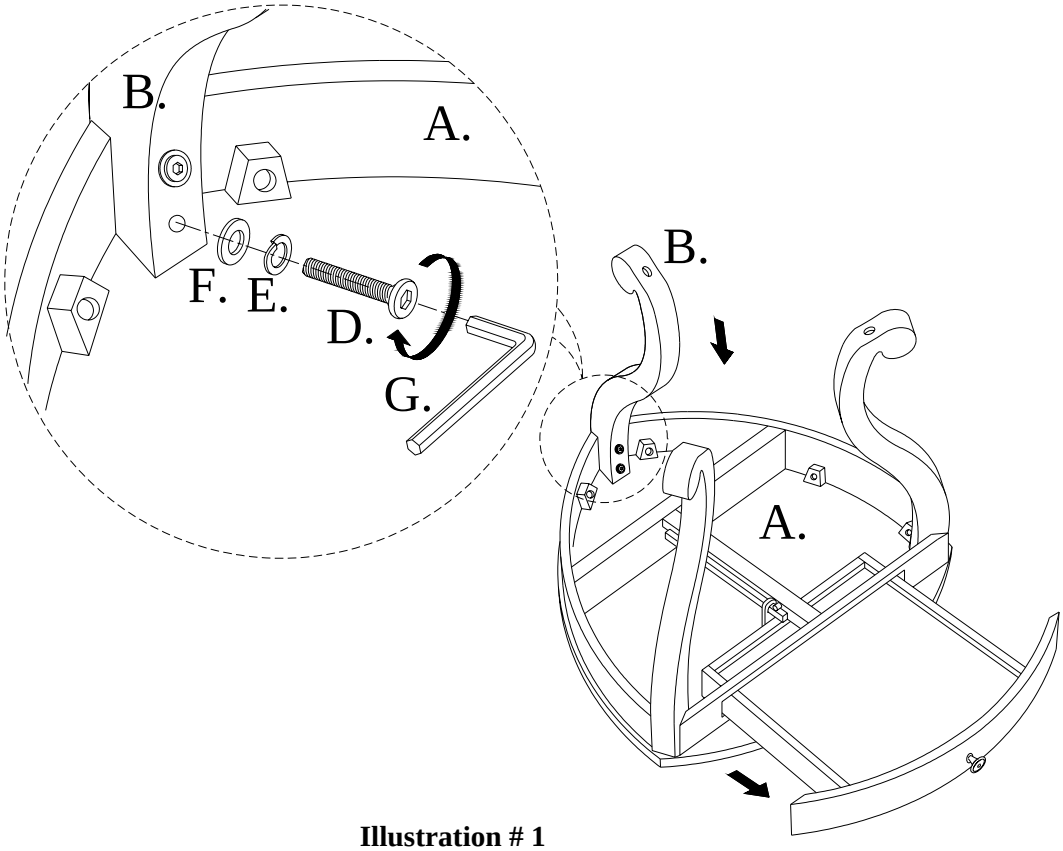

Illustration # 1

1853023
Glamour Side Table

Attach Base Assembly

Parts required

C.	Base Assembly	1 pc	F.	Flat Washers	3 pcs
D.	Allen Head Bolts	3 pcs	G.	Allen Head Wrench	1 pc
E.	Lock Washers	3 pcs			

1. **Attach Base Assembly (C)** Push the drawer back in. Align the pre-drilled holes on the Base Assembly (C) with the pre-threaded holes on the Legs (B). Secure with Allen Head Bolts (D), Lock Washers (E) and Flat Washers (F) using the Allen Head Wrench (G). Now tighten all bolts on Legs (B).

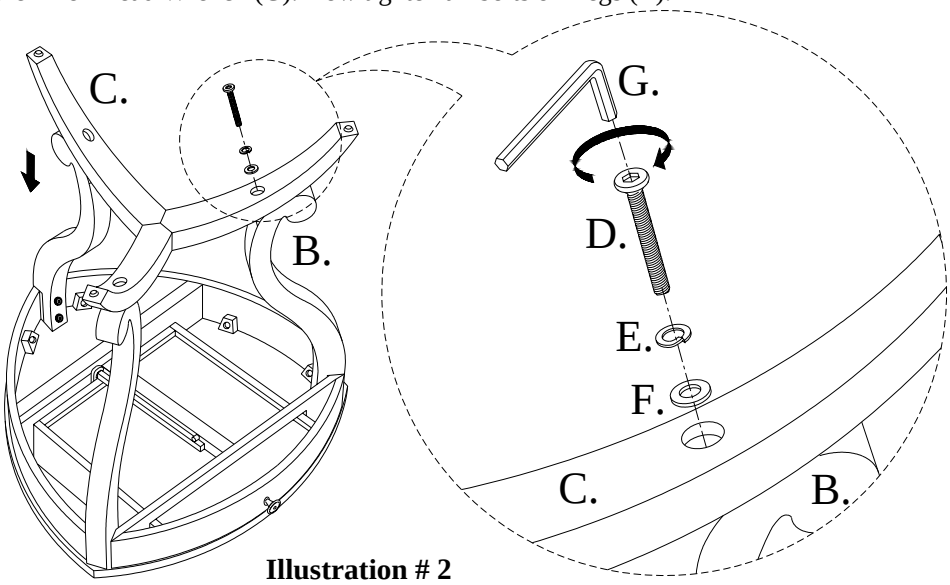

Illustration # 2

Attach Tassel
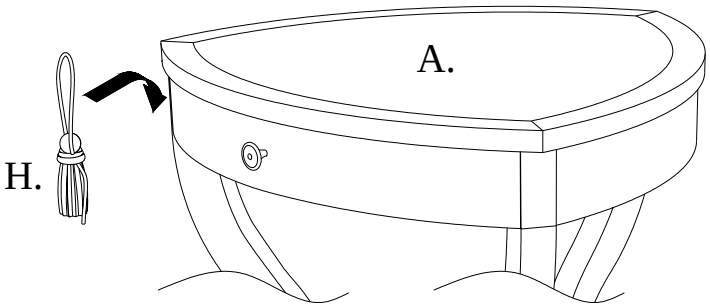
1. **Attach Tassel (H)** Turn the table upright. Hang the Tassel (H) on the drawer pull.